HSF RoHS

# Specifications

备注(Remark)
1.材料(MATERIAL)
胶芯：PA6T/LCP+30%G.F UL94V-0，颜色: 黑色.
Housing: PA6T/LCP+30%G.F UL94V-0,Color: Black
四方针：黄铜
Contact: Brass
2.特性 (characteristics):
额定电流：2 AMP
Rating Current: 2 AMP.
接触阻抗：20 mΩ MAX.
Contact Resistance: 20 mΩ MAX.
绝缘阻抗：1000 MΩ min.
Insulating Resistance: 1000 MΩ min.
耐电压：AC 500V.
Withstanding Voltage: AC 500V.
温度范围：-40°C to+105°C
Temperature Range: -40°C to+105°C

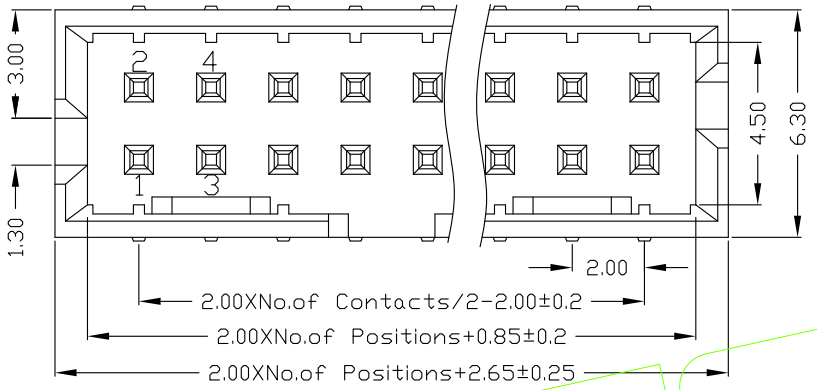


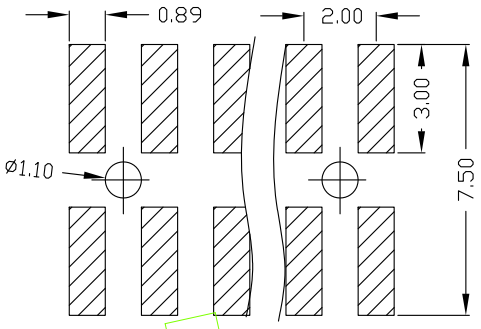


Recommended P.C.B layout

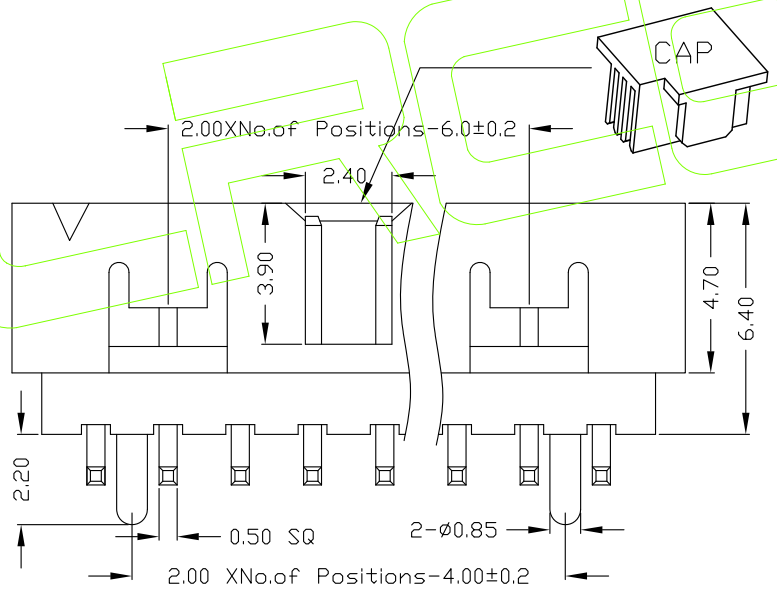


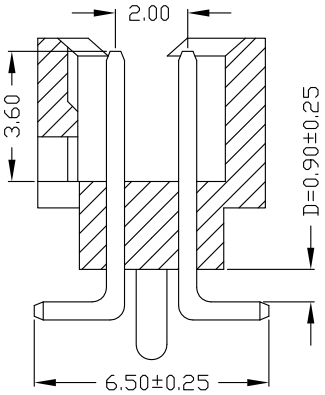


## Ordering Information

2B64M- 1 XX XX X X X 2 A1

| No. of Pins | Contact Plating | Insulator Material | Color | Packing |
|---|---|---|---|---|
| 6~68P | G0=Gold Flash<br>G1=1u"Gold<br>G4=3u"Gold<br>G5=5u"Gold<br>G6=10u"Gold<br>G7=15u"Gold<br>G9=30u"Gold<br>F0=Gold Flash<br>F1=1U"Gold/Tin<br>F4=3U"Gold/Tin<br>F5=5U"Gold/Tin<br>F6=10U"Gold/Tin<br>F7=15U"Gold/Tin<br>F9=30U"Gold/Tin<br>SN=Tin<br>SM=Matte Tin | B:PA6T<br>C:PA9T<br>D:LCP | B:Black | A:PE Bag<br>B:Tape & Reel+CAP<br>C:Tube<br>D:Tube+CAP<br>E:Tray<br>F:Tape & Reel |

LRCON

| REV | DATE | MODIFICATION DESCRIPTION | CHANGE | APPROVE |
|---|---|---|---|---|
| A1 | 20/06/09 | Improve numbering instructions (完善编号标注说明) | A1 | 张涛 |
| A0 | 12/05/18 | NEW | ——— | ——— |

| OPERATION | | DRAW | LIANR | 20/06/09 |
|---|---|---|---|---|
| X.X | ±0.40 | DESIGN | 张涛 | |
| X.XX | ±0.25 | | | |
| X.XXX | ±0.15 | CHECK | 罗荣军 | |
| Angle | ±3° | | | |
| DIM | TOL | APPROVE | 方里军 | |

| SCALE | | Fit |
|---|---|---|
| UNIT | | MM |
| SIZE | A4 | DESIGN |
| SHEET | 1/1 | CHECK |
| PROJ. | | APPROVE |

LRCON 连润电子有限公司
Lrcon Electronics Co.,Ltd

| | |
|---|---|
| PART NO. | 2B64M-1XXXXXXX2 |
| TITLE: | 2.0莫仕简牛 塑高6.4 SMT带柱 |
| Customer No. | |