HSF RoHS

Specifications

备注(Remark)
1.材料(MATERIAL)
胶芯：PA6T/PBT+30%G.F UL94V-0，颜色: 黑色.
Housing: PA6T/PBT+30%G.F UL94V-0,Color: Black
四方针：黄铜
Contact: Brass
2.特性 (characteristics):
额定电流：3 AMP
Rating Current: 3 AMP.
接触阻抗：20 mΩ MAX.
Contact Resistance: 20 mΩ MAX.
绝缘阻抗：1000 MΩ min.
Insulating Resistance: 1000 MΩ min.
耐电压：AC 500V.
Withstanding Voltage: AC 500V.
温度范围：-40°C to+105°C
Temperature Range: -40°C to+105°C

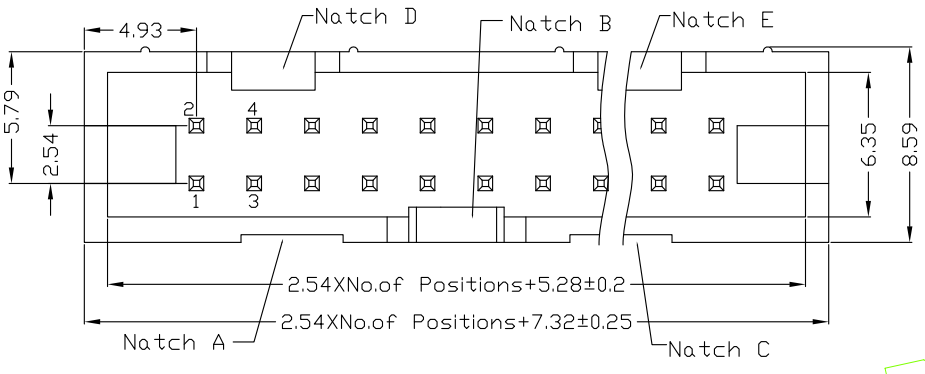

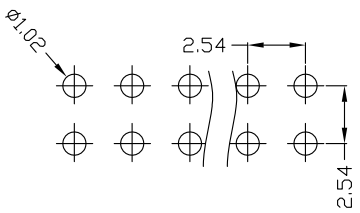

Recommended P.C.B layout

Below 10P With Notch "B" and "c"
10 To 14Pin With Notch "B"/"C"/"D"/"E'
14 To 64Pin With Notch "A"/"B"/"C"/"D"/"E'

LRCON

Ordering Information

3B94S- 1 XX XX X X X 1 △A1

No. of Pins	Contact Plating	Insulator Material	Color	Packing
6~64P	G0=Gold Flash	A:PBT	B:Black	A:PE Bag
	G1=1u"Gold	B:PA6T	G:Grey	B:Tape & Reel+CAP
	G4=3u"Gold	C:PA9T	W:White	C:Tube
	G5=5u"Gold			D:Tube+CAP
	G6=10u"Gold			E:Tray
	G7=15u"Gold			F:Tape & Reel
	G9=30u"Gold			
	F0=Gold Flash			
	F1=1U"Gold/Tin			
	F4=3U"Gold/Tin			
	F5=5U"Gold/Tin			
	F6=10U"Gold/Tin			
	F7=15U"Gold/Tin			
	F9=30U"Gold/Tin			
	SN=Tin			
	SM=Matte Tin			

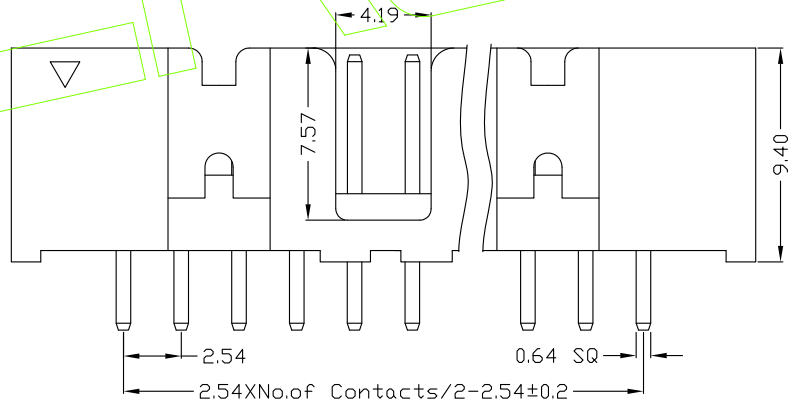

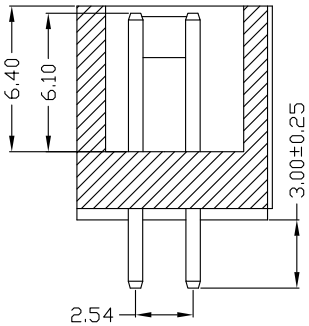

REV	DATE	MODIFICATION DESCRIPTION	CHANGE	APPROVE
A1	20/06/09	Improve numbering instructions (完善编号标注说明)	△A1	Fang
A0	12/05/18	NEW	———	———

OPERATION		DRAW	LIANR	12/05/18
X.X	±0.40	DESIGN	Fang	
X.XX	±0.25			
X.XXX	±0.15	CHECK		
Angle	±3°			
DIM	TOL	APPROVE		

SCALE		Fit
UNIT		MM
SIZE	A4	DESIGN
SHEET	1/1	CHECK
PROJ.		APPROVE

LRCON 连润电子有限公司
Lrcon Electronics Co.,Ltd

PART NO.	3B94S-1XXXXXXX1
TITLE:	2.54莫仕简牛 塑高9.4 180度
Customer No.	